HELI

LIFTING THE FUTURE

1.2-1.6 ton

CDD12-CDD16

AC ELECTRIC PALLET STACKING TRUCKS

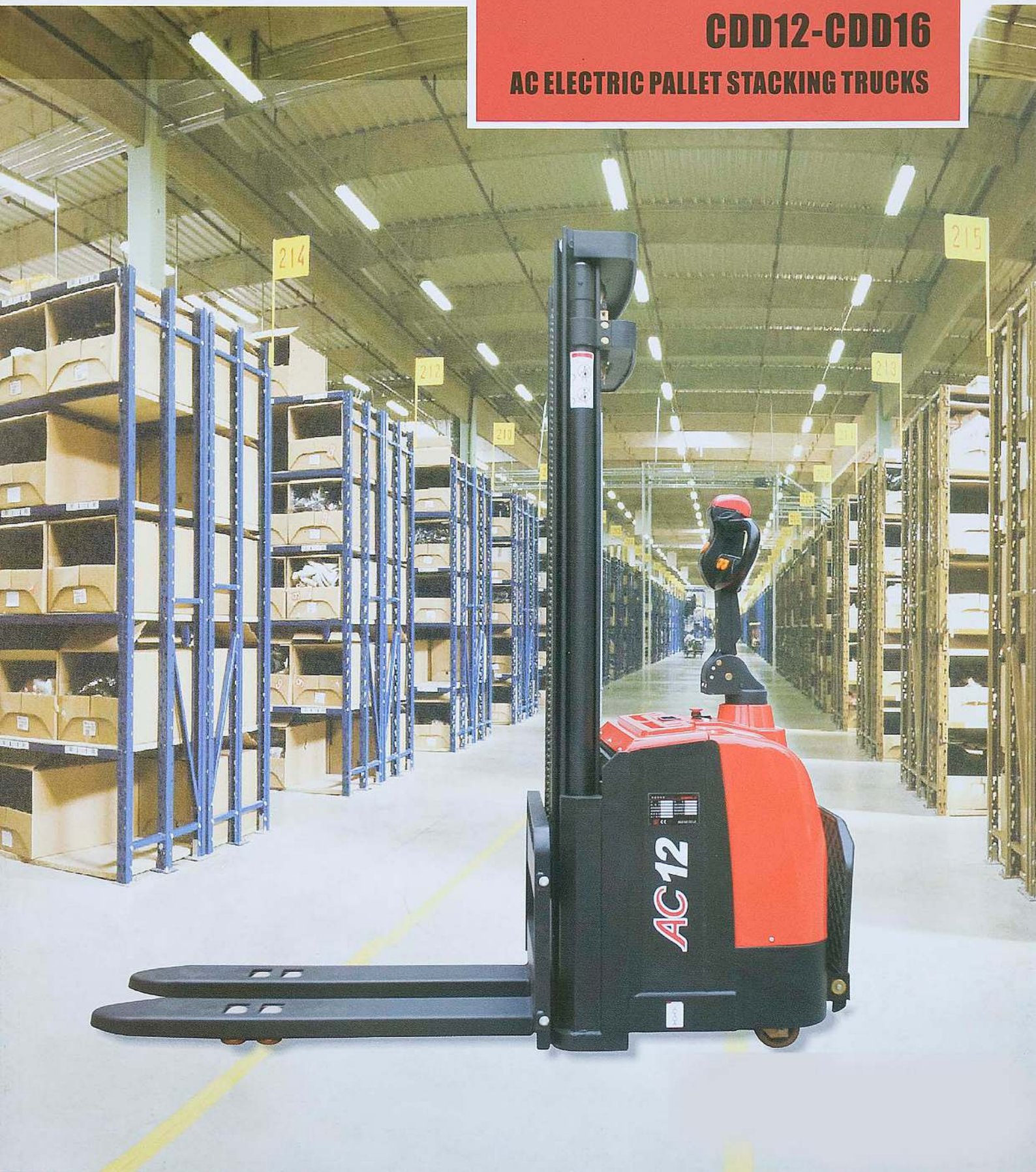

- **Multi-function instrument**
  It includes the hour meter, and battery discharge indicator (BDI) to inform the operator to recharge the battery in time.

- **OPerator handle**
  Ergonomic designed handle is easy and comfort controlled, with two solenoid it can achieve three lowering speed to meet different needs.

- **Electric power steering system (EPS)**
  The steering system is not connected with the driving system to prevent any disadvantage that they move together, when the handle turning the driving unit no longer needs turning accordingly. EPS is more effective and precise, its module design and malfunction display provides fast and simple self diagnosis function.

- **AC drive motor and Curtis AC controller**
  AC drive motor offers excellent power performance even on full load, Curtis controller has advanced cooling system and compact and sealed design.

- Except CDD12-970, other pallet stackers have the following special features:

- **Drive wheel friction automatic compensation system**
  Central pressure boost cylinder linked with the hydraulic system, the cylinder pressure is increased accordingly as the load increasing, it adds more pressure to the driving wheel to ensure the best friction on the ground, this design solves the problem in the industry that the driving wheel is easy skid with full load.

- **Sealed stabilizer wheel**
  Special design sealed stabilizer wheel not only eliminates the fiber material intertwined, but also ensures the stability during driving and steering, effectively reduces the sway and side turn over.

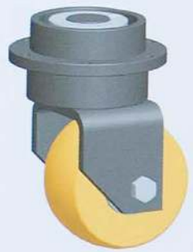

- **Easy change battery side extraction**
  The battery can be pulled out from side makes the battery changing more convenient and quickly.

1.2-1.6ton
CDD12-CDD16
AC ELECTRIC PALLET STACKING TRUCKS

Characteristics							
1	Model Designation		CDD14	CDD16	CDD16	CDD12	CDD12
2	Configuration Number		930	D930	950	030	970
3	Power type		electric(battery)				
4	Operator Type		pedestrian/stand-on				
5	Load capacity	Q (kg)	Refer to related load curve and mast configuration table				
6	Load center	c(mm)	600				500
7	Wheelbase	y(mm)	1325		1375	1270	1179
Wheels							
8	Tyre Type		PU				
9	Wheels number, stabilizer/load (x=driving wheels)		1x+2/4				1x+0/2
Dimensions							
10	Standard lifting height	h3 (mm)	3000		3700	3000	3000
11	Closed Mast height	h1 (mm)	1980		1800	1980	1780
12	Extended Mast height	h4 (mm)	3690		4390	3690	3670
13	Height of habdle in neutral position	h14 (mm)	1430		1450	1455	1450
14	Overall length,platform-up	L1 (mm)	2050		2105	1990	2591
15	Length to face of forks	L2 (mm)	900		955	780	1521
16	Overall Width	b1 (mm)	850		937	812	1015
17	Height,fork lowered	h13 (mm)	85				80
18	Fork dimensions, thickness/ width/ length	s/e/L(mm)	55/185/1150				40/100/1070
19	Width overall forks	b5 (mm)	550/600/650				200~812
20	Ground clearance	m2 (mm)	30				50
21	Outside turning radius, platform up/down	Wa(mm)	1580/1990		1630/2040	1525/1935	1337/1839
22	Right angle stacking aisle width for pallets 800 × 1200mm, platform up/down（clearance：200）	Ast (mm)	2380/2780		2430/2825	2330/2715	2980/3460
23	Right angle stacking aisle width for pallets 1000 × 1200mm, platform up/down（clearance：200）	Ast (mm)	2410/2800		2460/2850	2360/2740	3000/3480
Performance							
24	Travel speed, with/without load	km/h	4.5/4.5				5/5
25	Lifting speed, with/without load	mm/s	130/230		110/210	130/230	
26	Lowering speed, with/without load	mm/s	110/160		110230	110/170	100/180
27	Gradeability, with/without load	%	5/7				
28	Service Brake		Electromagnetic brake				
Motor							
29	Drive motor power	kW	AC 1.5				
30	Lift motor power	kW	DC 3				
31	Battery voltage/ capacity	V/ Ah	24/280			24/210	24/270
Weight							
32	Battery Weight	kg	234			190	250
33	Weight (include battery)	kg	1270	1329	1612	1135	1890

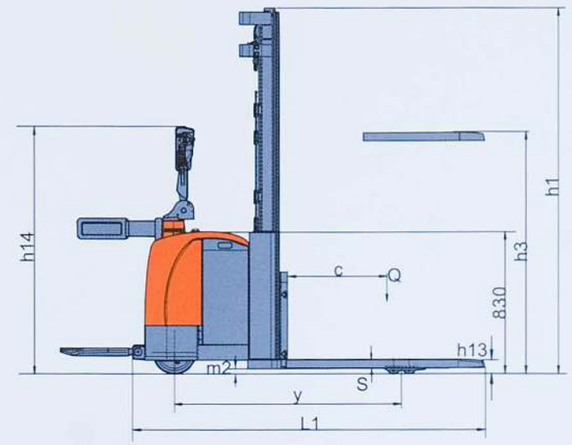

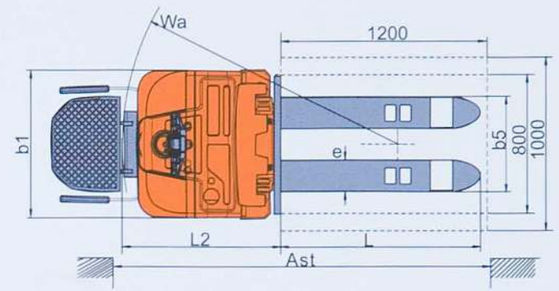

CDD14-930
CDD16-D930

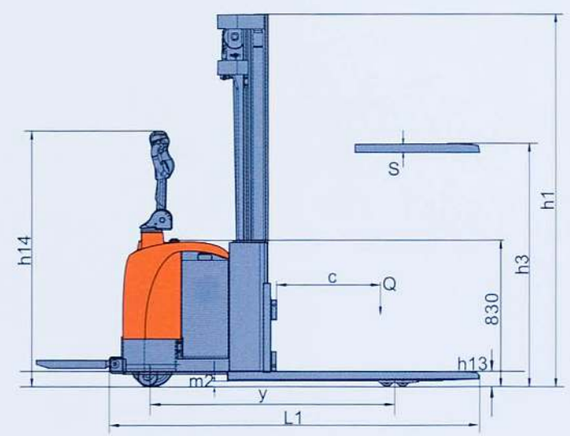

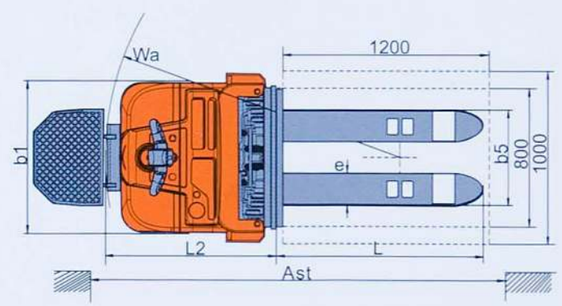

CDD16-950

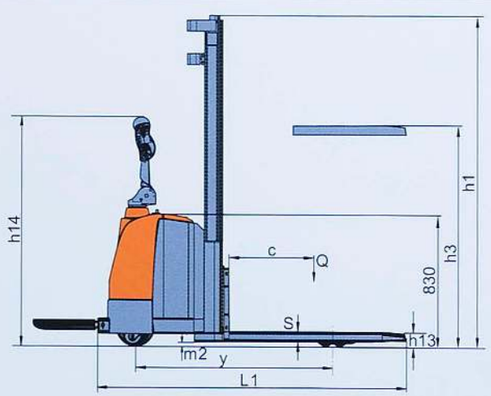

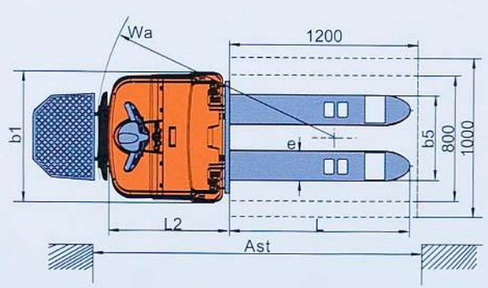

CDD12-030

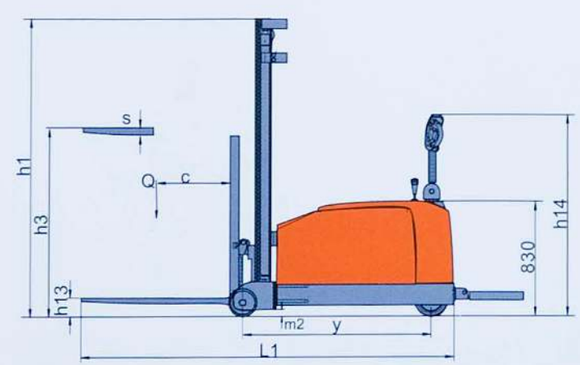

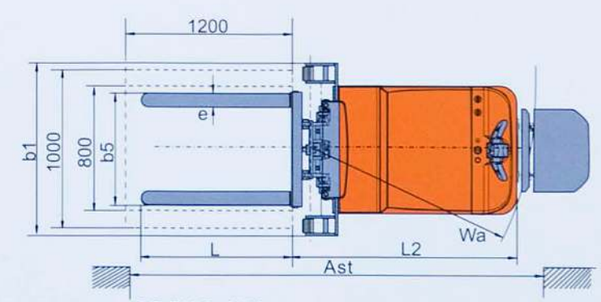

CDD12-970

1.2-1.6ton
CDD12-CDD16
AC ELECTRIC PALLET STACKING TRUCKS

CDD12-970

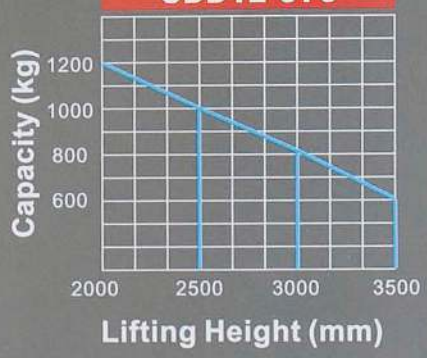

CDD12-030

CDD14-930

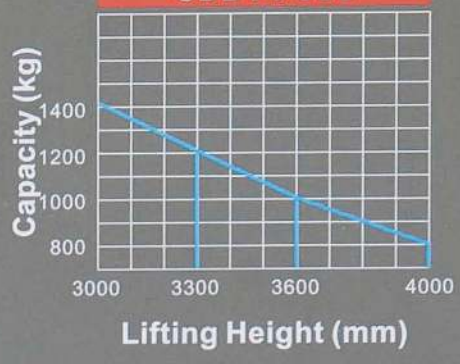

CDD16-950

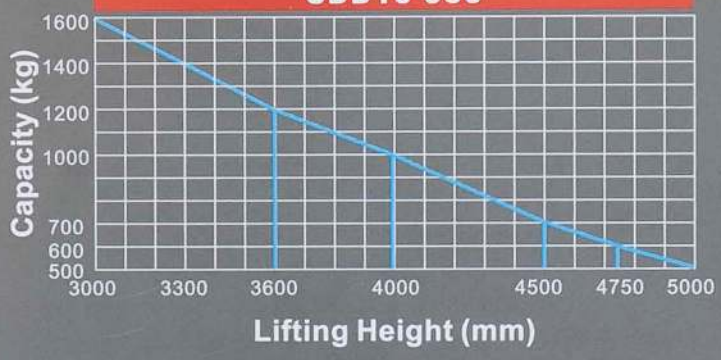

CDD16-D930

Wide view Mast for CDD12-970

Mast model	Lifting height (mm)	Load capacity (kg)	Closed mast height (mm)	Extended mast height (mm)	Tilt angle (forward/ backward) (°)
M250	2500	1000	1780	3670	3/5
M270	2700	900	1880	3870	3/5
M300	3000	800	2030	4170	3/5
M330	3300	650	2130	4470	3/5
M350	3500	600	2230	4670	3/5

Wide view Mast for CDD12-030

Mast model	Lifting height (mm)	Load capacity (kg)	Closed mast height (mm)	Extended mast height (mm)
M250	2500	1200	1765	3190
M270	2700	1200	1865	3390
M300	3000	1200	1980	3690
M330	3300	1000	2135	3990
M360	3600	800	2335	4290

Wide view full free 3-stage Mast for CDD16-950

Mast model	Lifting height (mm)	Load capacity (kg)	Closed mast height (mm)	Extended mast height (mm)	Free lift mm
ZSM370	3700	1150	1800	4390	1335
ZSM390	3900	1050	1900	4590	1448
ZSM400	4000	1000	1985	4690	1520
ZSM450	4500	700	2085	5190	1620
ZSM470	4700	600	2135	5390	1670
ZSM500	5000	500	2235	5690	1770

Wide view Mast for CDD14-930 and CDD14-D930

Mast model	Lifting height (mm)	Load capacity (kg)		Closed mast height (mm)	Extended mast height (mm)
		CDD14-930	CDD16-D930		
M250	2500	1400	1600	1765	3190
M270	2700	1400	1600	1865	3390
M300	3000	1400	1600	1980	3690
M330	3300	1200	1400	2135	3990
M360	3600	1000	1200	2335	4290
M400	4000	800	1000	2500	4690

Heli UK • Unit 10 • Hewitts Ind Est • Elmbridge Road
Cranleigh • Surrey • GU6 8LW • United Kingdom
www.heliuk.com